PoWer Plus Series

GeKaMac®

PoWer Plus TIG 200 DC PFC

Manual Instructions

Please Read and Understand This Manual
Before Operating The Welding Machine

www.gedikwelding.com

This machine is for internal use only.

It complies with the WEEE Directive.

This machine has been designed in accordance with the EN 60974-1 and EN 60974-10 standards.

The machine is safe when installation, operation, and maintenance are performed in accordance with the user manual and regulations. The operator and machine owner are responsible for adhering to safety rules.

Gedik Kaynak San. Ve Tic. A.Ş. assumes no responsibility for safety or CE compliance if any modifications are made to the machine or if safety rules are not followed.

This Class A equipment is not suitable for use in homes and similar residential areas where the power supply is provided by the low-voltage public electricity network.

This machine is not household waste and cannot be disposed of in the trash.

When the machine reaches the end of its service life or becomes obsolete, it must be disposed of in accordance with regulations.

COMPLIES WITH THE WEEE DIRECTIVE.

Eco Design Statement

This machine has been designed and manufactured in accordance with the requirements of the 2009/125/EC Eco Design Directive concerning the environmentally friendly design of energy-related products.

Accordingly, machines with an idle mode are as follows.

	Idle Mode
MMA	**X**
MIG	√
TIG	√
Plazma	√
SAW	**Out of Scope**

Efficiency measurements should be conducted only on the power unit. The water cooling system should be disabled. For more information on measurements and machine settings, Gedik Kaynak Sanayi ve Ticaret A.Ş. should be consulted.

Attention!

Our Valued Customer,

We kindly request that you obey the warnings mentioned below:

- Definitely have the “Warranty Document” approved when you get the machine.
- Use the machine in a way that is in accordance with the fundamentals that are mentioned in the user’s guide of the machine.
- Refer to the nearest GEDIK WELDING authorized service or the service center of GEDIK WELDING when a problem comes up.

Thank you for prefering one of GeKaMac® products.

AT UYGUNLUK BEYANI

EU DECLARATION OF CONFORMITY

Bu uygunluk beyanı yalnızca imalatçının sorumluluğu altında düzenlenir.

This declaration of conformity is issued under the sole responsibility of the manufacturer.

İstanbul, Turkey, 08.03.2024

İmalatçı / Manufacturer

GEDİK KAYNAK SANAYİ ve TİCARET A.Ş.

Ankara Cad. No.306 Seyhli Pendik ISTANBUL TURKIYE

Ürün / Product	ARC WELDING MACHINE
Marka-Model / Brand- Model	PoWerPlus TIG 200 DC PFC

Yukarıda tanımlanan beyanın nesnesi ilgili uyumlaştırılmış AB mevzuatı ile uyumludur.

The object of the declaration described above, is in conformity with the relevant union harmonisation legislation.

Direktifler / Directives 2014/30/EU & 2014/35/EU & 2009/125/EC

Uyumlaştırılmış standartlar ve uygunluğun deklare edilmesiyle ilişkili diğer referanslar.

References to the relevant harmonised standarts used and references to the other technical specifications in relation to which conformity is declared.

EN IEC 60974-1:2018-A1:2019
EN IEC 60974-10:2021

Bu ekipman, talimatlara uygun kurulduğunda, bakımı yapıldığında ve kullanıldığında belirtilen standartlara uygundur. Makine üzerinde bir değişiklik yapıldığında veya yanlış kullanımda deklarasyon geçersiz olur.

The equipment is in compliance with pertinent legislation when installed, utilized, and maintained in accordance with the enclosed instructions. This declaration will be invalid under any modification or improper use.

İmalatçı Adına imzalayan / Signed for and on behalf of:

Hatice Özel, Equipment Business Unit Director

INDEX

Page

1. Index 2

2. Safety Rules 3

2.1. Electrical Shock 3

2.2. Arc Rays 3

2.3. Gases and Fumes 3

2.4. Welding Sparks 3

2.5. Electricity and Magnetism 4

3. Electromagnetic Compatibility (EMC) 4

4. General Information and Warnings 5

5.Advantages and General Properties of PoWer Plus TIG 200 DC PFC 6

6.Working Principle of PoWer Plus TIG 200 DC PFC 6

7. Technical Information 7

8. Installation 7

9. Layout for Front & Rear Panel 9

10. Welding Operation 10

11. Welding Parameters 11

12. Machine Maintenance 11

13. Troubleshooting 12

14. Warranty Conditions 14

15. Warranty Document 15

2. SAFETY RULES

Protect yourself and others against possible serious injury or death risks. Keep children away. People who have pacemakers in their bodies should consult their doctors before operating the welding machine. Be careful when you are doing operations with your hands on the pieces. Use proper equipment that are necessarry to protect yourself from burns that can be caused by excessive heating of the piece during welding and / or cutting operation. Be sure that all set up, maintenance and repair related operations are performed only by qualified people.

2.1. ELECTRICAL SHOCK

Electrode and the piece that is being worked on or ground circuits are active in terms of electricity while the welding machine is on. Don't touch these active parts with bare hands or wet clothing. Wear dry gloves that have no holes to insulate your hands.

2.2. ARC RAYS

Use a protective mask with a proper filter to protect your eyes from the sparks and the rays of the arc while welding or watching such an actitivity. The head mask and the filtered glasses must meet the ANSI Z87.I standards.

2.3. GASES AND FUMES

Fumes and gases that are harmful to health can form during the welding operation.

Do not inhale these gases or fumes. Keep your head out of the fumes while welding. Provide sufficient ventilation in the arc and / or use fume suction machines to keep fumes and gases out of the breathing area.

2.4. WELDING SPARKS

Put away elements that are fire hazards from the welding area. If this is not possible, cover these hazards to prevent welding sparks from starting a fire. Do not forget that welding sparks and hot materials coming from welding can go on to neighboring areas easily through small cracks and openings. Don't do welding near hydrolic lines. Always keep a fire extinguisher on hand.

2.5. ELECTRIC AND MAGNETISM

Electric flow that passes through a conductor causes Electric and Magnetic Fields (EMF) to be formed. Welding current creates EMF around welding cables and welding machines.

— EMF can ruin the operation of some pacemakers. For this reason, welders who have pacamakers in their bodies should consult their doctors before welding.

— Being exposed to EMF during welding, can cause other unknown health problems.

— Getting exposed to EMF will be minimized by paying attention to the following instructions:

- Guide electrode and chassis cables together.
- Never wrap electrode and chassis cables around your body.
- Do not place your body between the electrode and chassis cables.
- Connect the chassis cable as close to the piece that is being worked on as possible.
- Stay as far away as you can from the power units.

3. ELECTROMAGNETIC COMPATIBILITY (EMC)

This machine has been designed in accordance with all related regulations and norms. Additionally, it can still generate electromagnetic forces that affect other systems such as communications (telephone, radio, television). These affects can cause security problems in the exposed systems. Read carefully and understand this section in order to reduce or get rid of the affects that can be created by this machine.

This machine has been designed to be operated in the industry area. If it is operated in private places (house etc.), it will become necessary to take special precautionary measures in order to prevent possible electromagnetic affects. It is necessary for the user to set up and operate these machines just like the way it is described in the handbook. If an electromagnetic affect is perceived due to the operation of these machines, the user should take corrective measures in order to get rid of these affects. If necessary, the user should contact GEDIK WELDING IND. COM. LTD. CO. No changes should be made in the machine without getting written approval from GEDIK WELDING IND. COM. LTD. CO.

The control of the work area should be made in terms of tools that can work improperly due to the electromagnetic affects before the machine is assembled.

- Inlet and outlet cables, telephone cables and control cables that are found in the work area of the machine.
- Radio and/or television transmitters and receivers,

3. ELECTROMAGNETIC COMPATIBILITY (EMC) (Continuing)

- Computer or computer controlled tools,
- Safety and control equipment for industrial operations,
- Calibration and measurement appliances,
- Medical appliances such as heart rhtyme appliance and hearing aids,

Control the electromagnetic immunity of the equipments that operate near the work area. The user should be certain that all the equipments that are in the work place are compatible. Otherwise, it can necessitate additional protective measures.

Ideal dimensions of the work place are determined by the construction of the area and other factors that are found there. Take the warnings below into consideration in order to decrease the affects of the electromagnetic waves that the machine generates:

* Make the connection of the machine with the network electricity in the way it is stated in the user's guide. If an electromagnetic interaction comes into being, such preventive measures as filtring the main electrical inlet may need to be taken.

* Outlet cables should be as short as possible and should be kept together.

4. GENERAL INFORMATION AND WARNINGS

Do not set up, operate or repair before reading the user's guide and the security measures that are found in it. Hide this user's guide and always have it on hand.

- Cut off the electrical connection between the welding machine and the network when the work is finished or when you are going to take a long break.

- Do not make any changes in the welding machine. This operation can cause the machine to lose its properties and a change in technical data.

- It is forbidden to do adaptation on the welding machine. Doing adaptation does not only cause the loss of warranty rights, but also can jeopardize the operational safety of the machine and can create the risk of electrocution for the users.

- A damage in the welding machine due to a mistake of the user will cause the loss of warranty rights.

- Acceptable environmental temperature range during work is between -10 °C and +40 °C.

- Acceptable relative humidity rate is 95% at 20 °C.

- Manufacturing company reserves the right to change the technical properties without prior notice.

5. ADVANTAGES AND GENERAL PROPERTIES OF PoWer Plus TIG 200 DC PFC

- TIG series welder is a TIG welder which adopts the insulated gate bipolar transistor (IGBT) power module.

It can change work frequency to medium frequency so as to replace the traditional hulking work frequency transformer with the cabinet medium frequency transformer. Thus, it is characterized with portable, small size, light weight, low consumption and noise etc.

- Excellent welding performance

TIG series has excellent performance: constant current output makes welding arc more stable; fast dynamic response speed reduces the impact from the arc length fluctuation to the current.

There are also some automatic protection functions for over voltage, over current, over heat, etc. inside the welders, when the problems listed before occurred, the alarm on the front panel is light and at the same time the output current will be cut off. It can self-protect and prolong the using life and greatly improve the reliability and practicability of the welders.

TIG series can be ignited easily and with good weld bead.

TIG series has wide range of applications. Given its small size, light weight, easy and flexible operation, it can be used in various kinds of environment, such as working aloft, field work, interior decoration,etc.

High duty cycle. In 40□ environment, TIG series' duty cycle can reach 60%, so that can keep continuous operation.

- Stable structures

The front and rear panel are made of engineering plastic, that have features of heat-resistant, corrosion-resistant, to ensure the welder keep normal work even under bad environments.

6. ELECTRICAL PRINCIPLE DRAWING

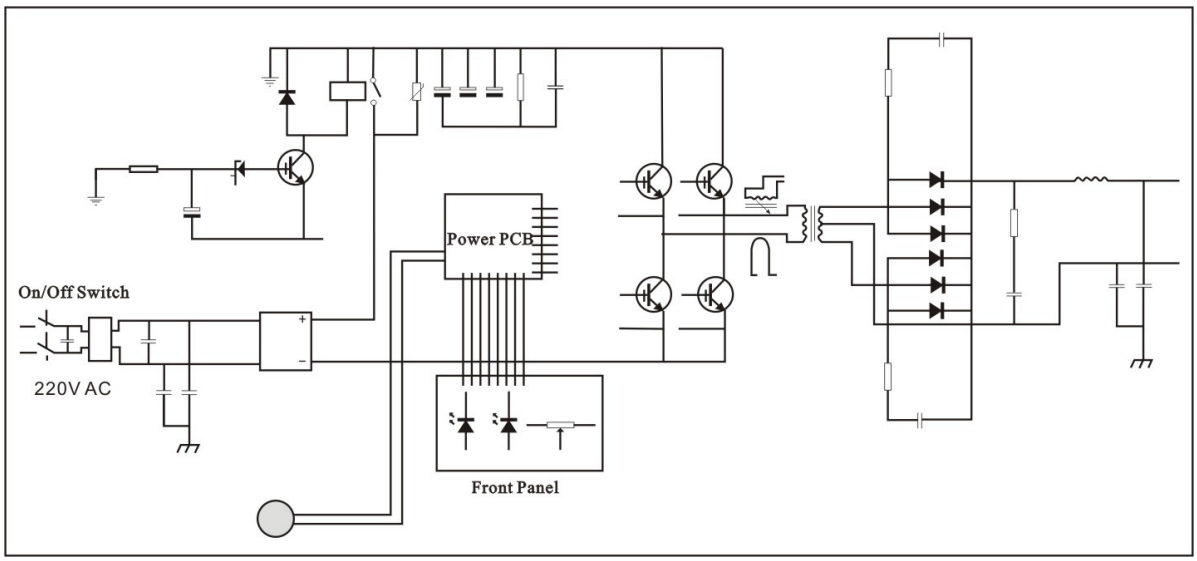

7. TECHNICAL INFORMATION

Model	PoWer Plus TIG 200 DC PFC	
Rated input voltage (V)	1~220/230/240±10%	
Frequency (Hz)	50 / 60	
Rated input power (kW)	TIG	MMA
	4,4	7
No-load voltage (V)	67	
Welding current range (A)	5~200	
Duty cycle (40℃ 10min)	50% 200A	35% 200A
	100% 160A	100% 135A
Post flow (S)	0~5	
Rated input current (A)	20	32
Efficiency (%)	85%	
Power factor	0.75	
Protection class	IP23	
Insulation class	H	
Dimensions (mm)	450×135×250	
Net weight (kg)	9	

8. INSTALLATION

TIG series welding machine has equipped with power supply compensating system, so it can keep work if the power supply only floating in the range 15% more or less than the rated input power.

If the used cable is much longer, we recommend using larger-size cable to reduce the voltage drop. Because if the cable is too long, it may affect the welder's arc starting performance or affect the system's normal working.

1. Make sure the vent of the machine is not covered or blocked, the ventilation system is effective.

2. Connect well with the shield gas supply. The gas supply system should include gas bottle, argon decompression flow meter and hose, the connection part of the hose should be fasten by hose clamp or something like it, to avoid leakage or air inlet.

3. Connect the machine cover with the earth cable which should be at least 6mm2. One method is to connect the grounding screw which on the back of the machine to the earth equipment. The other method is to ground the power supply socket's earth connection separately. And it is also OK to use these two methods simultaneously to ensure safety.

4. Connect the welding torch correctly according to the picture as below, TIG operation mode: fasten the welding torch's electrical-gas integration connector to the joint on the front panel, fasten the aero socket to the corresponding joint. TIG Series should be installed according to picture 1 as below.

8. INSTALLATION (Continuing)

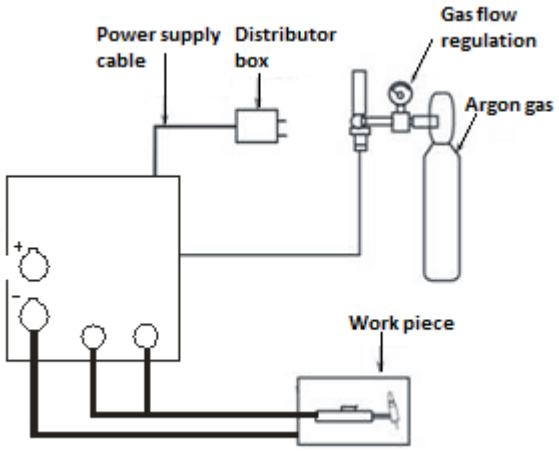

Picture 1

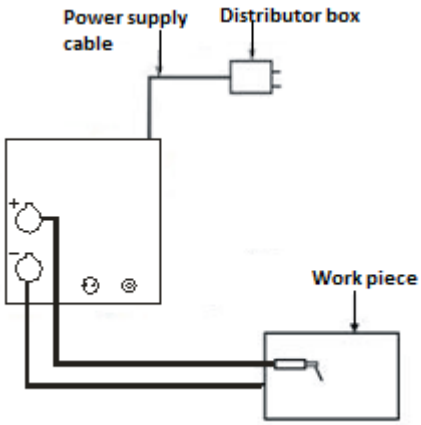

Picture 2

5. If the power supply equipment is put on slope, pay attention on preventing it from toppling. .

6. Prohibit using the power supply for unfreezing the pipeline.

7. Connect the fast plug of the earth cable to the positive electrode of the welding machine panel and tighten it clockwise. Use the earth clamp to clamp the work piece; connect the welding gun cable to the negative electrode of the machine panel.

8. Connect the power cable to the matching distributor box according to the voltage grade; do not connect the wrong one. And also should ensure the voltage difference is within the allowance. After above steps, the installation is finished, and can start welding operation.

Warning!
All of the connections can be done only after the power supply is shut off. The correct sequence is connecting the electrode holder or welding torch and the earth cable to the machine firstly, and then checking to make sure the connection is correct, reliable and no loose, connecting the power cable plug to the power supply at last.

9. LAYOUT FOR FRONT & REAR PANEL

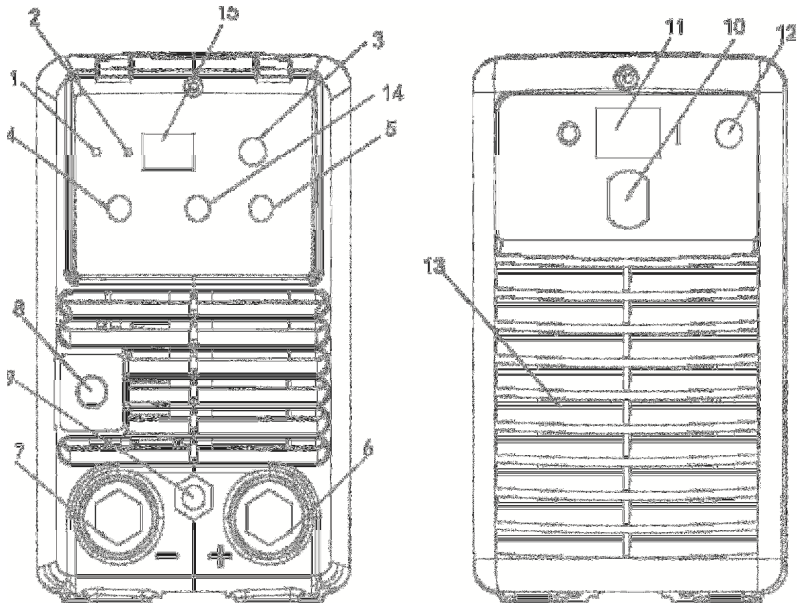

（1） Power pilot lamp: This pilot lamp when lit indicates that the machine is on.

（2） Alarm pilot lamp: This pilot lamp when lit indicates that the protection of the machine has been activated.

（3） 2T/4T/MMA: Select 4T, 2T or MMA operation mode.

（4） Welding current regulation knob: Set welding current.

（5） Post gas flow regulation knob: adjust the time of post gas flow.

（6） Positive output: Connect with welding electrode or connect to earth when use TIG function.

（7） Earth connection: Connect with earth clamp.

（8） Welding gun switch: connect with duplex aviation.

（9） Welding gun connection: Connect with the welding gun.

（10） Cable clamp: Fastened the main cable.

（11） On/off switch: Control the power supply on and off.

（12） Gas inlet: Gas inlet connection.

(13) Fan: Cooling the machine.

(14) Down slope regulation knob: adjust the time of down slope.

(15) Current digital display

10. WELDING OPERATION

Knocking Arc: Take the electrode upright to touch the workpiece, after forming short circuit, quickly lift up about 2~4 mm, and arc will be ignited. This method is difficult to master. But in the welding for the brittle or hard steel, it is better to use knocking way.

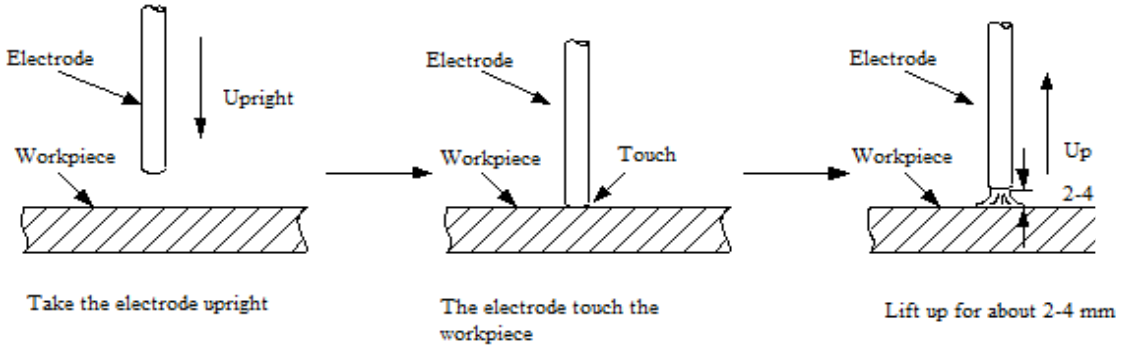

Lifting Arc: take the electrode to scrape the workpiece for striking arc. But it may cause the arc scratch, so must to lift arc in the groove.

Manipulation of Electrode

In MMA welding, there are three motions to being matched in the end of electrode: the electrode moving to the molten pool along axes; the electrode swing right and left; the electrode moving along welding way.

The operator can choose the manipulation of electrode based on

welding joint shape, welding position, electrode spec, welding

current and operation skill, etc.

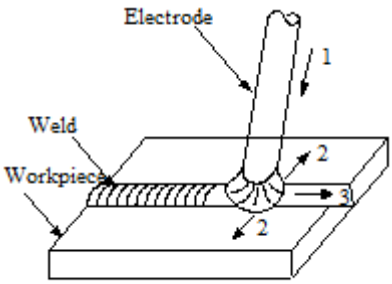

11. WELDING PARAMETERS

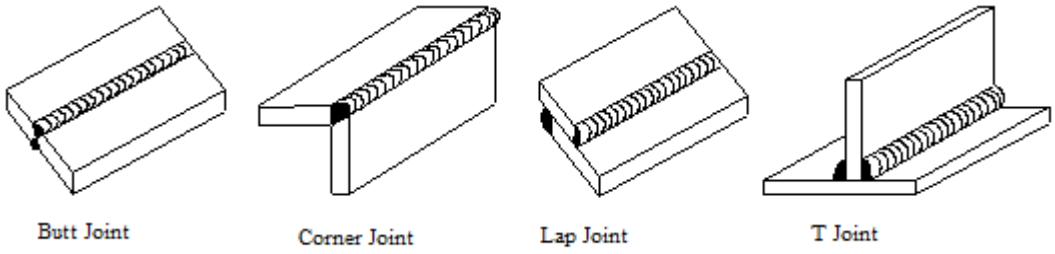

12. MACHINE MAINTENANCE

In order to guarantee that arc welding machine works high-efficiently and in safety, it must be maintained regularly. Let customers understand the maintenance methods and means of arc welding machine more , enable customers to carry on simple examination and safeguarding by oneself, try one's best to reduce the fault rate and repair times of arc welding machine, so as to lengthen service life of arc welding machine .Maintenance items in detail are in the following table.

● **Warning: For safety while maintaining the machine, please shut off the supply power and wait for 3 minutes, until capacity voltage already drops to safe voltage 36V.**

Date	Maintenance item
Daily examination	Observe that whether panel knob and switch in the front and at the back of arc welding machine are flexible and put correctly in place. If the knob has not been put correctly in place, please correct; If you can't correct or fix the knob , please replace immediately;
	If the switch is not flexible or it can't be put correctly in place, please replace immediately; Please get in touch with maintenance service department if there are no accessories.
	After turn-on power, watch/listen to that whether the arc welding machine has shaking, whistle calling or peculiar smell. If there is one of the above problems, find out the reason to get rid of; if you can't find out the reason, Please contact local this area agent or the branch company.
	Observe that whether the display value of LED is intact. If the display number is not intact, please replace the damaged LED. If it still doesn't work, please maintain or replace the display PCB.
	Observe that whether the min/max value on LED accords with the set value. If there is any difference and it has affected the normal welding craft, please adjust it.
	Check up that Whether fan is damaged and is normal to rotate or control. If the fan is damaged, please change immediately. If the fan does not rotate after the arc welding machine is overheated , observe that whether there is something blocked in the blade, if it is blocked, please get rid of ; If the fan does not rotate after getting rid of the above problems, you can poke the blade by the rotation direction of fan. If the fan rotates normally, the start capacity should be replaced ; If not, change the fan.
	Observe that whether the fast connector is loose or overheated. if the arc welding machine has the above problems, it should be fastened or changed.
	Observe that Whether the current output cable is damaged. If it is damaged, it should be wrapped up, insulated or changed.

12. MACHINE MAINTENANCE (Continuing)

Date	Maintenance item
Monthly examination	Using the dry compressed air to clear the inside of arc welding machine. Especially for clearing up the dusts on radiator, main voltage transformer, inductance, IGBT module, the fast recover diode and PCB, etc.
	Check up the bolt in arc welding machine, if it is loose, please screw down it. If it is skid, please replace. If it is rusty, please erase rust on bolt to ensure it works well.
Quarter- yearly examination	Whether the actual current accords with the displaying value. If they does not accord, they should be regulated. The actual current value can be measured by the adjusted plier-type ampere meter.
Yearly examination	Measure the insulating impedance among the main circuit, PCB and case, if it below 1MΩ, insulation is thought to be damaged and need to change , and need to change or strengthen insulation.

13. TROUBLESHOOTING

- Before arc welding machines are dispatched from the factory, they have already been debugged accurately. So forbid anyone who is not authorized by our company to do any change to the equipment!
- Maintenance course must be operated carefully. If any wire becomes flexible or is misplaced, it maybe potential danger to user!
- Only professional maintenance personal who is authorized by our company could overhaul the machine!
- Guarantee to shut off the arc welding machine's power before turn on the outline of the equipment!
- If there is any problem and has no the authorized professional maintenance personal of our company, please contact local our company agent or the branch company!

13. TROUBLESHOOTING (Continuing)

Symptom	Solution
Power indicator does not light, fan does not rotate, no welding output	1. Make sure the power switch is turned on.
	2. Check to confirm that the power input cable is connected well with the grid.
The fan rotates, alarm indicator does not light, no HF electric discharge,touch striking arc is OK.	1. Check all connectors inside the machine whether there is problem; check whether the welding torch's control cable is break.
	2. It may be caused by circuit defect, check the reason and contact with the after-service.
Alarm indicator does not light, have high frequency, no welding output.	1. Welding torch's cable is break. Earth cable breaks or has not been connected with the work piece.
	2. The connections between the positive output terminal or welding torch output terminal with the inside part of the machine are loose.
Alarm indicator does not light, no high frequency, touch striking arc is OK.	1. The connection between the primary coil of arc starting transformer and the power panel is bad, should re-connect them.
	2. The input cable from power switch to power panel AC220V drops off.
	3. Some components of the high voltage electric starting arc circuit are damaged, find them out and change them with the new ones.
Alarm indicator lights, no output.	1. It is may because of over current protection, turn off the machine. Restart the machine after the alarm indicator is off and it should be normal.
	2. Also may because of overheat protection, no need to turn off the machine but just wait for 2~3 minutes, then it may come normal. If the alarm indicator does not light, it may be caused by control PCB power short-circuit or damage.
Power indicator is flashing, alarm indicator does not light, no output.	1. Input over voltage or short voltage, check the input power.
	2. When the machine is turn on, there is welding output load, thermistance block the input power supply. Turn off the machine and wait for several seconds then turn on the machine without load.
Input current is unstable or not controlled by the potentiometer.	1. If it is because of the potentiometer damage, replace the potentiometer. Or if it caused by the bad connections, especially socket connector, need inspection.

14. WARRANTY CONDITIONS
1. The length of the warranty starts on the date of delivery and it is for 1 year. 2. The whole merchandise including all its parts are covered by the warranty of our company. 3. If the merchandise breaks down within the length of the warranty, the time spent in the repair shop will be added to the length of the warranty. The length of repair of the merchandise is at the maximum 20 working days. This period of time starts on the date that the merchandise was delivered at one of the following locations: A service station or the seller of the merchandise or dealer or agency or representation office or importer or manufacturer, in this order if there are no service stations. 4. If the merchandise breaks down either due to material and workmanship or assembly lines within the length of the Warranty, it will be repaired without demanding any money under the name of expenditure of workmanship, the cost of the changed piece or under any other name. 5. Replacement operation will be done without charge in cases where the merchandise repeats the same fault more than twice or different faults come up more than four times within the length of the warranty, the length of the repair exceeds maximum necessary time and the determination of the unrepairability of the merchandise by a report that is prepared either by a service station or the seller or a dealer or an agency or a representation office or the importer or the manufacturer, in this order, if there are no service stations. 6. Faults that are results of misuse according to the user's guide of the merchandise are not covered by the warranty. 7. Ministry of Science Industry and Technology, The Protection of the Consumer and Competition General Directorate can be refered to whenever a problem concerning the warranty document comes up. 8. Earth clamp and welding kits are not under warranty.

GeKaMac®

Gedik Welding Machines

Warranty Document

MACHINE INFORMATION

Brand : GeKaMac®

Model : ……

Serial Number : ……

CUSTOMER INFORMATION

Company Name : ……

Authorized Person : ……

Telephone : ……

Company Address : ……

City/Country…… ……

E-Mail :…… @……

Signature /Cachet :

SERVICE INFORMATION

Authorized Service : ……

Service Staff : ……

Installation Date : ……/……/……

Warranty Starting Date : ……

Warranty Expiration Date : ……

Signature /Cachet :

GeKaMac®

Gedik Welding Machines

Warranty Document

MACHINE INFORMATION

Brand : GeKaMac®

Model : ……

Serial Number : ……

CUSTOMER INFORMATION

Company Name : ……

Authorized Person : ……

Telephone : ……

Company Address : ……

City/Country…… ……

E-Mail :…… @……

Signature /Cachet :

SERVICE INFORMATION

Authorized Service : ……

Service Staff : ……

Installation Date : ……/……/……

Warranty Starting Date : ……

Warranty Expiration Date : ……

Signature /Cachet :

Manufacturer:
Company Name: Shanghai HI-ZONE Welding Equipment Manufacture Co.,Ltd.
Company adress: A-2nd Floor, No.99-3, Shenmei Road, Zhoupu, Pudong, Shanghai 201318 China
Contact Details: T: +86 21 31295500 | F: +86 21 51919711

Importer:
Gedik Kaynak San ve Tic A.Ş
Company Adress: Ankara Cad No: 306 Seyhli 34906 Pendik, Istanbul
TURKEY
Contact Details: +90 216 3785000

PoWer Plus Series

GeKaMac®

Gedik Welding Ankara Caddesi
No : 306 Şeyhli 34906 Pendik, İstanbul / Turkey
T +90 216 378 50 00 F +90 216 378 20 44
gedik@gedik.com.tr